THIS DRAWING IS A CONTROLLED DOCUMENT

DRAWING NO AU29453

PART NO.	CATALOGUE NO.
EF3981-000	CC38-50-SN-M12

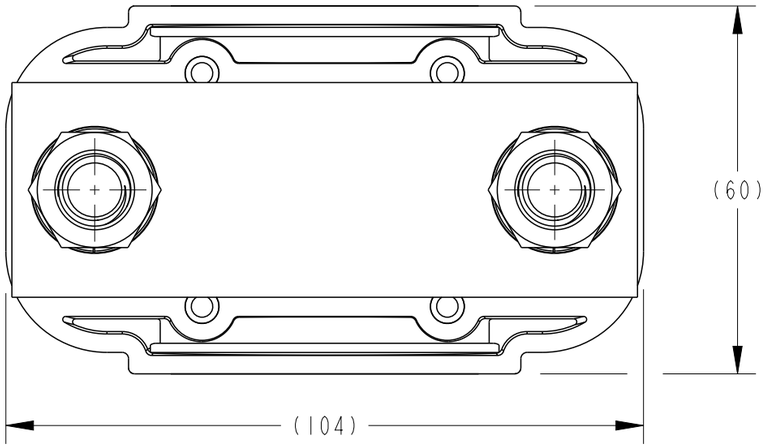

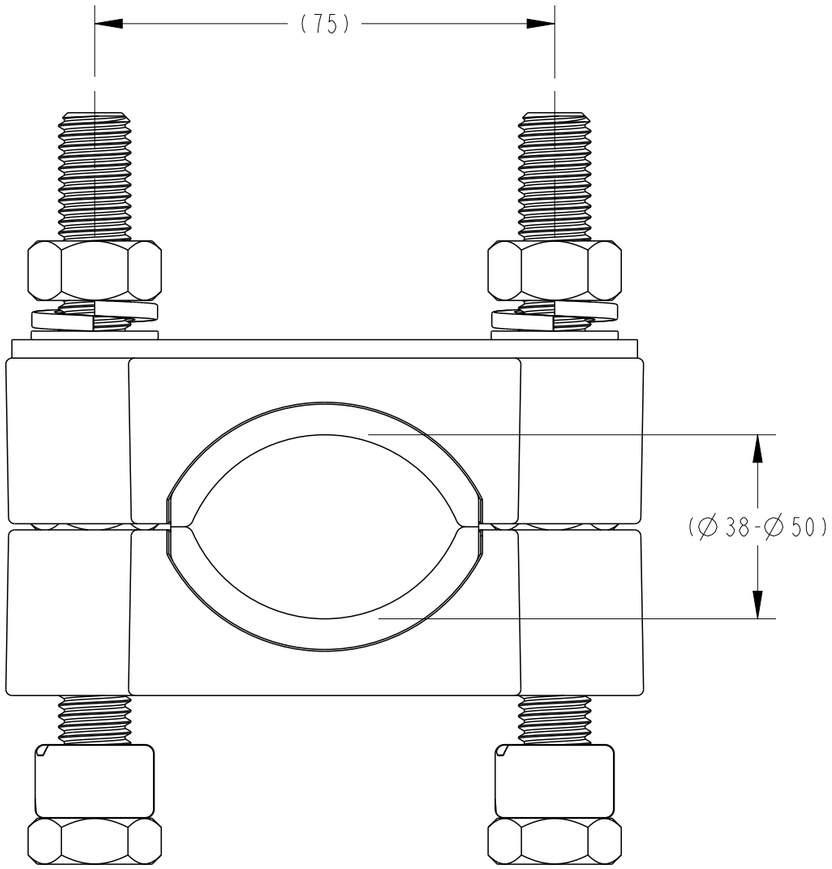

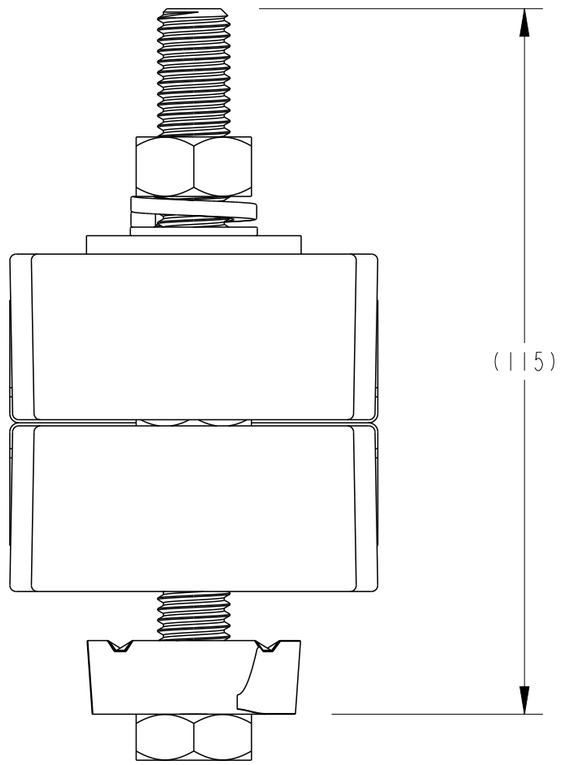

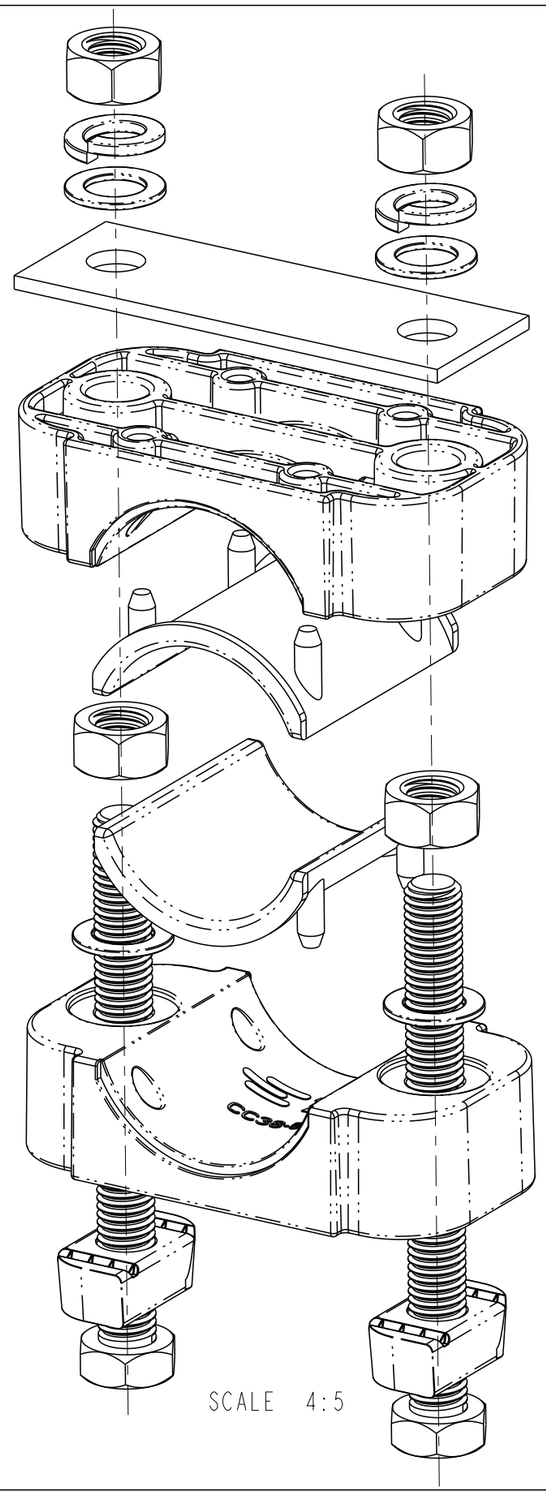

POS	REV	REVISION RECORD	DATE	DWN	APVD
—	1	NEW RELEASE	28-04-2014	RN	AT

LOC

DIST

IMPLIED NOTES
BURRS AND SHARP EDGES REMOVED
SCREW THREADS ARE TO AS 1275
DO NOT WORK TO DIMS MARKED REF
SURFACE FINISH 6.3 U.N.O.
DIMS ARE IN mm. DO NOT SCALE

IMPLIED TOLERANCES
HOLE DIA AND LOCATIONS.±0.5mm
DIMENSIONS UP TO 30mm..±1.5mm
DIMENSIONS OVER 30mm...±5%
UP TO A MAX OF.....±5mm
ANGULAR DIMENSIONS.....±5°

TCPN EF3981-000
PART Alias UTX/DUL CC38-50-SN-M12
Cat No CC38-50-SN-M12

TITLE
CABLE CLEAT Ø38-Ø50
STRUT NUT M12

DRAWN RN | DATE 28-04-2014
CHECKED RN | APPROVED AT

TE Connectivity
2/3 Corella Close
Berkeley Vale NSW 2261 Australia

MATERIAL DESC -
MATERIAL NO - | MATL SPEC/STD/DRG NO - | PROCESS SPEC HEAT TREAT/PLATING NO

SIZE A3 | PROJECTION 3RD ANGLE | SCALE 1:1 | DRAWING NO AU29453 | SHEET 1 OF 1 | REV 1

THIS INFORMATION IS CONFIDENTIAL AND PROPRIETARY TO TE CONNECTIVITY CORPORATION AND ITS WORLDWIDE SUBSIDIARIES AND AFFILIATES. IT MAY NOT BE DISCLOSED TO ANYONE, OTHER THAN TE CONNECTIVITY PERSONNEL, WITHOUT WRITTEN AUTHORIZATION FROM TE CONNECTIVITY CORPORATION, AUSTRALIA.