THIS COPY IS PROVIDED ON A RESTRICTED BASIS AND IS NOT TO BE USED IN ANY WAY DETRIMENTAL TO THE INTERESTS OF PANDUIT CORP.

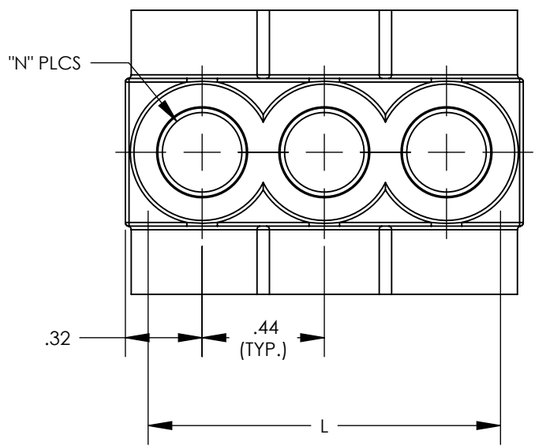

THREE PORT CONNECTOR BLOCK SHOWN
WITH PLASTIC CLOSURE PLUGS REMOVED.
SEE TABLE FOR DIMENSIONS OF PARTS
WITH ADDITIONAL PORTS

PANDUIT PART NUMBER	CONDUCTOR RATING	HEX KEY	SCREW QUANTITY	CAP (SCREW PORT) QUANTITY	CAP (WIRE PORT) QUANTITY	A	L	N	TIGHTENING TORQUE
PCSB4-2-12Y	#4 - #14 STR #10 - #14 SOL	1/8"	2	2	4	1.08	0.83	2	#10 - #14 = 45 IN-LBS #4 - #8 = 50 IN-LBS
PCSB4-3-12Y			3	3	6	1.518	1.268	3	
PCSB4-4-6Y			4	4	8	1.956	1.706	4	
PCSB4-5-6Y			5	5	10	2.394	2.144	5	
PCSB4-6-6Y			6	6	12	2.832	2.582	6	
PCSB4-8-4Y			8	8	16	3.708	3.458	8	
PCSB4-10-4Y			10	10	20	4.584	4.334	10	
PCSB4-12-3Y			12	12	24	5.46	5.21	12	
PCSB4-14-2Y			14	14	28	6.336	6.086	14	

LISTED

CERTIFIED

NOTES:

1. UL486A-UL486B LISTED, DUAL RATED CU9AL FOR ALUMINUM OR COPPER CONDUCTORS. MEETS OR EXCEEDS ANSI C119.4
2. SEE TABLE FOR WIRE RANGE.
3. STRIP LENGTH: .56 +.06/-0
4. SEE PACKAGE LABEL FOR TIGHTENING TORQUE SPECIFICATIONS.
5. VOLTAGE RATING: 600 V. MAX. BUILDING WIRE, 1000 V. MAX. IN SIGNS & FIXTURES.
6. TEMPERATURE RATING: 90˚C (CU9AL).
7. CONNECTOR BLOCK BODY ARE MADE FROM ALUMINUM. CONDUCTOR PORTS IN CONNECTOR BLOCK ARE PREFILLED WITH AN OXIDE-INHIBITING COMPOUND.
8. CONNECTOR TO INCLUDE ZINC PLATED STEEL CLAMPING SCREWS FOR EACH CONDUCTOR PORT.
9. INSULATION MATERIAL IS CLEAR PVC.
10. CLAMPING SCREW ACCESS PORTS AND ALL WIRE ENTRY PORTS ARE PROVIDED WITH REMOVABLE PLASTIC CLOSURE PLUGS.
11. ALL DIMENSIONS SHOWN ARE NOMINAL.
12. ONLY ONE CONDUCTOR PER PORT ALLOWED.
13. PACKAGE QTY: -12 = 12 PCS.
    -6 = 6 PCS.
    -4 = 4 PCS.
14. THIS PART IS RoHS COMPLIANT

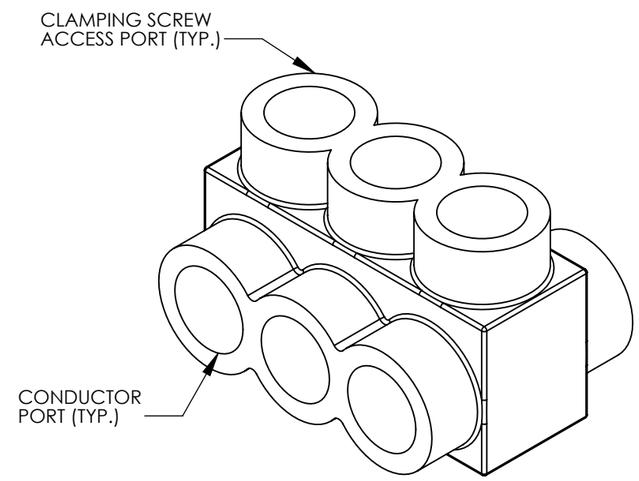

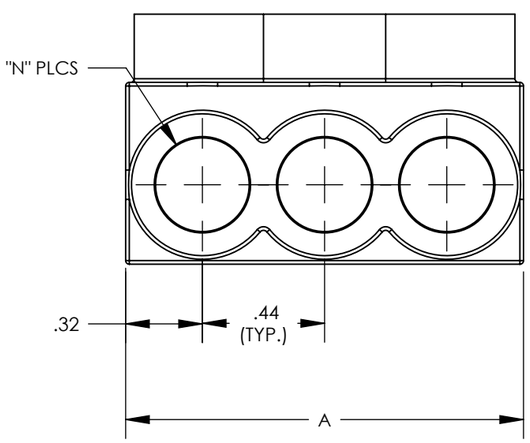

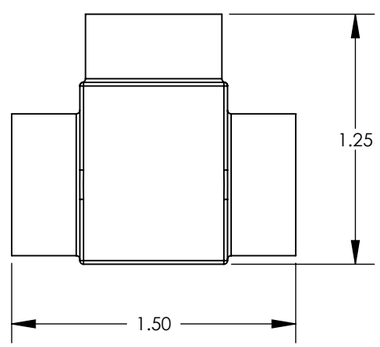

REV	DATE	BY	CHK	APR	DESCRIPTION	ECN
07	6/19	JHNU	TMR	RGB	REVISED WIRE RANGE FORMAT REVISED TIGHTENING TORQUE	048653
06	1/16	JHNU	JHNU	RGB	REVISED DIM: .32 WAS .42, .44 WAS .67 REVISED A AND L DIM'S FOR ALL PART NUMBERS REVISED NOTE 2: .56 WAS .50 REVISED NOTE 8: ZINC PLATED STEEL WAS TIN PLATED ALUM. REVISED NOTE 4	N41573BB-C41573
05	2/13	JHNU	JHNU	RGB	REVISED TITLE BLOCK	N41573BB-C41573

TITLE
MULTI-TAP INSULATED CONNECTORS
PCSB4 SERIES
CUSTOMER DRAWING

ITEM REVISION NAME: N41573BB-C41573/07

DATASET FILE NAME: C41573/07.SLDDRW

PANDUIT

UNLESS OTHERWISE SPECIFIED,
DIMENSIONAL TOLERANCES ARE: IN [mm]
.X ± .XXX ±
.XX ± .02 ANGLES ±

THIRD ANGLE PROJECTION

MATERIAL: SEE NOTES

DRAWING NUMBER: C41573

DRAWN BY	DATE	CHK	SCALE	SHEET	SIZE
MS	8/99	RLS	NONE	SHEET 1 OF 1	B