FILE NO.	B-CD-401-02

NOTES:

① MAT'L: COPPER (STOCK TKN. $\frac{.031}{.79}$ ±.001)
PLATING: ELECTRO TIN (.0003 MIN)
② TIN-PLATED BRASS FERRULE

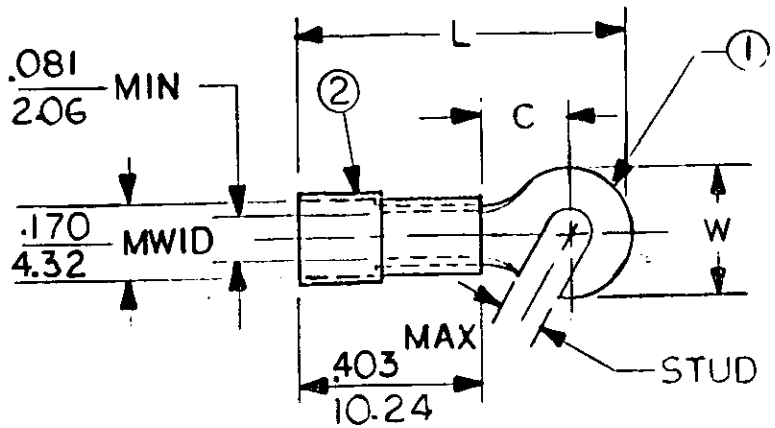

STUD SIZES: (±.005)

02 = .094
04 = .119
06 = .146
08 = .173
10 = .198
14 = .265
56 = .328
38 = .390

"UL" LISTING #E32244
"CSA" LISTING #18689

WIRE SIZE: 16-14 AWG
1.0-2.5 MM²

ALL DIMENSIONS = $\frac{\text{INCHES}}{\text{MM}}$

(MWID) DENOTES MAXIMUM WIRE INSULATION DIAMETER

PART NUMBER	"W" ±.010	"C" MIN.	"L" MAX.				AVAILABLE STUD SIZES	
B-419-	.350 / 8.89	.271 / 6.88	.896 / 22.76				06, 08, 10	

DIMENSIONAL TOLERANCES UNLESS OTHERWISE SPECIFIED			REFERENCE	SCALE: NTS	DATE	TITLE:
FRAC.	DEC.	ANG.		DRWN. BY: JJ	11-19-84	HOOK TONGUE TERMINAL VIBRAKRIMP 400 SERIES
±	±	±		CHKD. BY: GZ	11-30-84	
				APPRD. BY:		

ETC molex INCORPORATED

DWG. NO. A CUSTOMER DWG